# SHA

## Swimming pool dehumidifiers

Series SHA dehumidifier are expressly designed for use in swimming pools where humidity should be closely controlled in order to guarantee optimal comfort. These units are intended to be installed in a technical room close to the swimming pool. A centrifugal fan with high available static pressure allows unit connection to ductworks, both for air suction and discharge. This series comprises 5 basic models which cover a capacity range from 50 to 190 l/24h.

Temperature and humidity probes are accessories supplied on request.

### Versions

The series includes 5 models with air flows from 500 to 1900 m³/h.

| SHA | | 50 | 75 | 100 | 150 | 153 | 200 | 203 |
|---|---|---|---|---|---|---|---|---|
| Moisture removed at 30°C - 80% | l/24h | 49,0 | 73,0 | 95,0 | 155,0 | 155,0 | 190,0 | 190,0 |
| Moisture removed at 30°C - 60% | l/24h | 39,0 | 56,7 | 77,4 | 118,3 | 118,3 | 146,7 | 146,7 |
| Moisture removed at 27°C - 60% | l/24h | 34,9 | 50,1 | 69,1 | 104,4 | 104,4 | 129,5 | 129,5 |
| Moisture removed at 20°C - 60% | l/24h | 25,6 | 35,4 | 50,7 | 75,7 | 75,7 | 92,5 | 92,5 |
| Nominal input power (1) | kW | 0,70 | 1,29 | 1,76 | 2,07 | 2,07 | 2,74 | 2,74 |
| Maximum input power (1) | kW | 0,9 | 2,0 | 2,2 | 2,65 | 2,70 | 3,35 | 3,20 |
| Supplementary electric heater | kW | 3 | 3 | 3 | 6 | 4,5 | 6 | 4,5 |
| Maximum input current | A | 4,0 | 9,0 | 10,0 | 13,4 | 7,1 | 17,0 | 8,5 |
| Peak current | A | 19,0 | 27,0 | 40,0 | 46,0 | 30,0 | 65,0 | 45,0 |
| Hot water coil (2) | kW | 3,5 | 7,5 | 8,5 | 13,0 | 13,0 | 14,0 | 14,0 |
| Partial heat recovery (3) | kW | -- | 1,1 | 1,7 | 2,3 | 2,3 | 3,0 | 3,0 |
| Air Flow | $m^3/h$ | 500 | 800 | 1000 | 1400 | 1400 | 1650 | 1650 |
| Available static pressure | Pa | 50÷150 | 50÷150 | 50÷150 | 50÷150 | 50÷150 | 50÷150 | 50÷150 |
| Refrigerant | | R410A | R410A | R410A | R410A | R410A | R410A | R410A |
| Global warming potential (GWP) | | 2088 | 2088 | 2088 | 2088 | 2088 | 2088 | 2088 |
| Refrigerant charge | kg | 0,36 | 0,60 | 0,60 | 0,90 | 0,90 | 1,20 | 1,20 |
| Equivalent $CO_2$ charge | t | 0,75 | 1,25 | 1,25 | 1,88 | 1,88 | 2,20 | 2,20 |
| Sound power (4) | dB(A) | 57,0 | 59,0 | 61,0 | 66,5 | 66,5 | 68,5 | 68,5 |
| Sound pressure (5) | dB(A) | 50,0 | 52,0 | 54,0 | 59,5 | 59,5 | 61,5 | 61,5 |
| Power supply | V/Ph/Hz | 230/1/50 | 230/1/50 | 230/1/50 | 230/1/50 | 400/3+N/50 | 230/1/50 | 400/3+N/50 |

Performances are calculated with low fan speed and are referred to the following conditions:
(1)Temperature 30°C; Humidity 80%
(2)Room temperature 30°C; water temperature 80/70°C, at compressor OFF
(3)Room temperature 30°C/80%; water temperature 27/32°C.
(4) Sound power level calculated according to ISO 9614, fan with available static pressure 50 Pa.
(5) Sound pressure level measured at 1 mt from the unit in free field conditions according to ISO 9614.

## Plant scheme

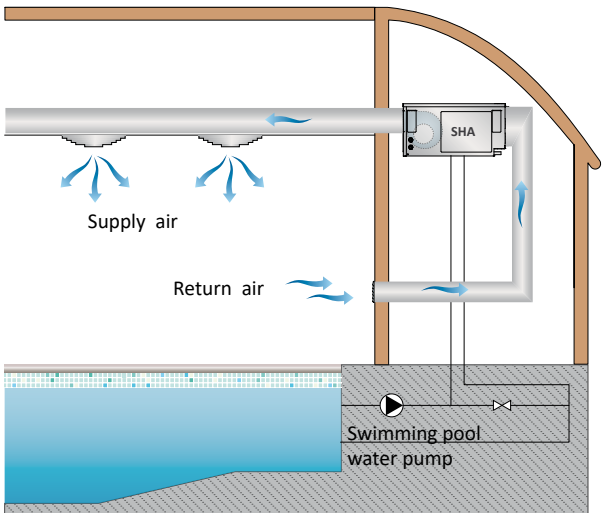


## Operation limits

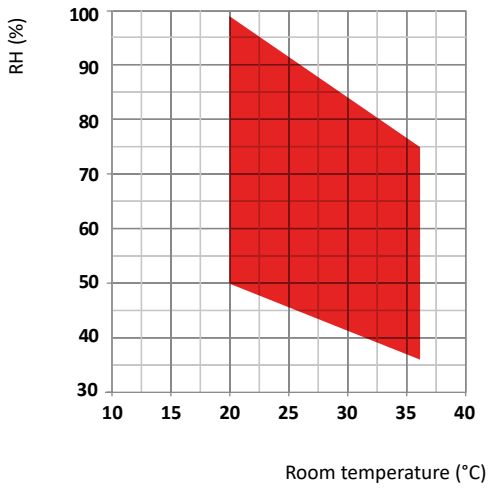

**Frame**
All SHA units are made from hot-galvanised thick sheet metal, painted with polyurethane powder enamel at 180°C to ensure the best resistance against the atmospheric agents. The frame is self-supporting with removable panels. All screws and rivets are in stainless steel. The colour of the units is RAL 9018.

**Refrigerant circuit**
The refrigerant gas used in these units is R410A. The refrigerant circuit is made by using international primary brands components and according to ISO 97/23 concerning welding procedures.
The refrigerant circuit includes: sight glass, filter drier, thermal expansion valve with external equalizer, Schrader valves form maintenance and control, pressure safety device (according to PED regulation).

**Compressor**
The compressors are rotary with crankcase heater and thermal overload protection by a klixon embedded in the motor winding. The compressors are mounted on rubber vibration dampers, supplied with sound attenuation jacket to reduce the noise emission.
The inspection on the compressors is possible only through the unit front panel.

**Condenser and evaporator**
Condensers and evaporators are made of copper pipes and aluminium fins.
All evaporators are painted with epoxy powders to prevent corrosion problem due to their use in aggressive environments. The diameter of the copper pipes is 3/8" and the thickness of the aluminium fins is 0,1 mm. The tubes are mechanically expanded into the aluminium fins to improve the heat exchange factor. The geometry of these heat exchangers guarantees a low air side pressure drop and then the use of low rotation (and low noise emission) fans.
All units are supplied, standard, with a painted steel drip tray and all evaporators are supplied with a temperature sensor used as automatic defrost probe.

**Fan**
The fans are made of galvanized steel, centrifugal type. It is statically and dynamically balanced and supplied.
The electric motors are directly connected to the fan; they are all at 3 speeds, with integrated therma protection. The protection class of the motors is IP 54.

**Air filter**
It is made of synthetic filtering media, undulated type, without electro-static charge; they are all removable for differential disposal, ePM10 50% according to UNI EN ISO 16890:2017.

**Microprocessor**
All units are supplied standard with microprocessor controls. The microprocessor controls the following functions: compressor timing, automatic defrost cycles, alarms.
An appropriate LCD display shows the operation mode of the unit, set point and alarms.

**Electric box**
The electric switch board is made according to electromagnetic compatibility norms CEE 73/23 and 89/336. The accessibility to the board is possible after removing the front panel of the unit and the OFF positioning of the main switch. The following components are also standard installed: main switch, magnetic-thermal switches (as a protection fans and compressors), control circuit automatic breakers, compressor contactors, fan contactors. The terminal board is supplied with voltage free contacts for remote ON-OFF and general alarm.

**Control and protection devices**
All units are supplied with the following control and protection devices: antifreeze protection sensor, high pressure switch with manual reset, low pressure switch with automatic reset, high pressure safety valve, compressor thermal overload protection, fans thermal overload protection.

**Test**
All the units are fully assembled and wired at the factory, carefully evacuated and dried after leak tests under pressure and then charged with refrigerant R410A.
They are all fully operational tested before shipment. They all conforms to European Directives and are individually marked with the CE label and provided with Conformity Declaration.

## Accessories

**CANA - Delivery flange for channel connection**
Press-folded rectangular flange for connection to the ducts and installed on the fan expulsion mouth.

**HYGR - Remote mechanical hygrostat**
To be installed on the wall, it is supplied with a regulation knob and working range from 30% to 100% with precision of 3%.

**HOEL - Electric heater**
The electric heater kit is in aluminium and is used to integrate the unit heating capacity.The kit is composed of an on-off double safety thermostat without capacity steps.

**HOWA - Hot water coil**
The heat exchanger is made of copper pipes and aluminium fins. The diameter of the copper pipes is 3/8" and the thickness of the aluminium fins is 0,1 mm. The tubes are mechanically expanded into the aluminium fins to improve the heat exchange factor.

**INSE - Serial interface card RS485**
This interface card enables the controller to comunicate with other devices using Modbus protocol.

**KGBH - Louver kit and case for ducted version**
Air grille double row adjustable brushed aluminium fins, equipped for wall mounting with subframe.

**KIVM - 3 way modulating valve kit**
It is used to control the waterflow in the coil. The valve is directly controlled from the unit microprocessor.

**LS00 - Low noise version**
This version includes the complete acoustic insulation of the unit (compressor + heat exchangers vanes) with compressor jackets and insulating material made with high density media and the interposition of heavy bitumen layer.

**PCRL - Remote control panel**
This panel can be mounted up to 50m (maximum) from the unit and replicates all of the control functions. It is connected using a twin cable of 0.5 mm sq section.

**RGDD - Humidity and Temperature electronic probe sensor**
Built-in Electronic temperature and humidity probe.

**RP01 - Partial heat recovery**
The unit is fitted with a Coaxial type heat exchanger suitable for chlorinated water. The internal pipe is manufactured from Cupronickel with the external pipe being made from Copper. The chlorinated water flows within the internal pipe whilst the refrigerant gas passes through the gap between the internal and external pipes. The Cupro-nickel internal pipe is manufactured with a special profile that generates turbulent flow within the refrigerant gas thus increasing the heat exchange factor, the thermal efficiency and reducing the dimensions. The heat exchanger is designed to recover approx. 20% of the thermal capacity generated by the unit.

**VECE - E.C. supply fan**
The supply fan is a high performance centrifugal type, double inlet forward curved blades, directly coupled to the electric motor. The fan wheel and the scroll are made from hot galvanised thick sheet metal, painted with polyurethane powders, to ensure the best resistance against aggressive environments. The electric motor is a high efficiency DC brushless type with external rotor, to guarantee an ideal cooling of the windings and the absence of power lost due to pulleys and belt transmission. The fan is statically and dynamically balanced class 6,3 according to ISO1940. The electric motor has a separate electronic commuter (driver) and a speed modulation 0-10V, integrated PFC, burn out thermal protection (in case of considerable reduction of the power supply), protection degree IP54, serial interface card with modbus protocol RTU.

| SHA | | 50 | 75 | 100 | 150 | 153 | 200 | 203 |
|---|---|---|---|---|---|---|---|---|
| Low noise version | LS00 | ● | ● | ● | ● | ● | ● | ● |
| Supply flange | CANA | ● | ● | ● | ● | ● | ● | ● |
| Humidity and Temperature electronic probe sensor | RGDD | O | O | O | O | O | O | O |
| Remote mechanical hygrostat | HYGR | O | O | O | O | O | O | O |
| Partial heat recovery Cu-Ni made | RP01 | – | O | O | O | O | O | O |
| Hot water coil | HOWA | O | O | O | O | O | O | O |
| Modulating 3 way valve kit installed | KIVM | O | O | O | O | O | O | O |
| Electric heater kit 3 kW (230/1~/50) | HOEL | O | O | O | O | – | O | – |
| Electric heater kit 4,5 kW (230/1~/50) | HOEL | – | – | – | – | O | – | O |
| Electric heater kit 6 kW (230/1~/50) | HOEL | O | O | O | O | – | O | – |
| Louver kit and case | KGBH | O | O | O | O | O | O | O |
| Remote control panel | PCRL | O | O | O | O | O | O | O |
| High efficiency E.C. fans ≤ 300 Pa | V1CE | O | O | O | O | O | O | O |
| Serial interface card RS485 | INSE | O | O | O | O | O | O | O |

● Standard, O Optional, – Not Available.

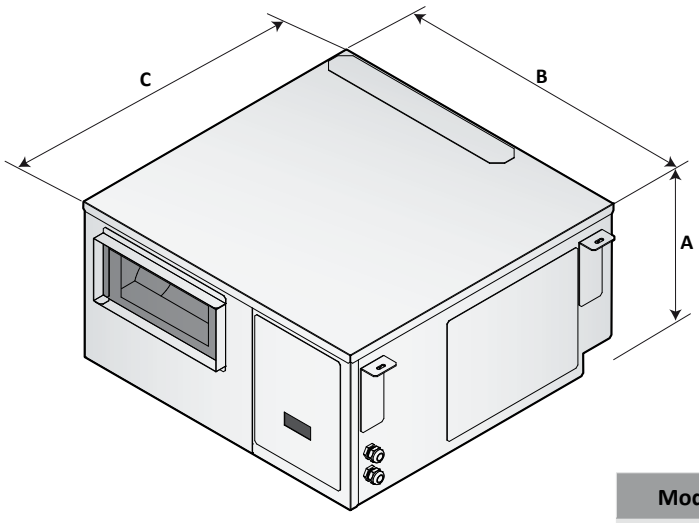


| Mod. | A (mm) | B (mm) | C (mm) | kg |
|---|---|---|---|---|
| **50** | 360 | 700 | 710 | 63 |
| **75** | 460 | 980 | 900 | 95 |
| **100** | 460 | 980 | 900 | 122 |
| **150/153** | 530 | 1160 | 1050 | 131 |
| **200/203** | 530 | 1160 | 1050 | 140 |